SUBURBAN INDUSTRIES • USA

Manufactured in the U.S.A.

SUBURBAN INDUSTRIES PRODUCT CATALOG VERSION 4

740 N Church Rd • Elmhurst, Illinois 60126
630.766.3773 (main) • 630.766.1364 (fax)
www.sub-ind.com • sales@sub-ind.com

Contents

Dowel Pins

04 - 29 Materials

04
+0.0002 Steel
+0.001 Steel
+0.002 Steel
Black Oxide Steel
Unhardened Steel

13
+0.0002 303 Stainless
+0.001 303 Stainless
316 Stainless
416 Stainless
Military Spec MS16555

20
Metric 18-8 Stainless
Metric 316 Stainless
Metric Steel

28
Aluminum
Monel
Titanium

Pull Dowel Pins

30 - 35 Materials/Types

30
Non Vented 303 Stainless
Vented 303 Stainless
Vented Steel

33
Metric Non Vented Steel
Metric Vented Steel

Phone: (630) 766-3773 info@sub-ind.com

Tap-End & Thread Studs

Capabilities & Sales Policies

Nominal Size	STD +0.0002		+0.001 Oversize		+0.002 Oversize	
	Min	Max	Min	Max	Min	Max
1/64	0.0157	0.0159	-	-	-	-
1/32	0.0314	0.0316	-	-	-	-
3/64	0.0470	0.0472	-	-	-	-
1/16	0.0626	0.0628	0.0634	0.0636	0.0644	0.0646
5/64	0.0782	0.0784	0.0790	0.0792	0.0800	0.0802
3/32	0.0939	0.0941	0.0947	0.0949	0.0957	0.0959
7/64	0.1095	0.1097	0.1103	0.1105	0.1113	0.1115
1/8	0.1251	0.1253	0.1259	0.1261	0.1269	0.1271
5/32	0.1564	0.1566	0.1572	0.1574	0.1582	0.1584
3/16	0.1876	0.1878	0.1884	0.1886	0.1894	0.1896
7/32	0.2189	0.2191	0.2197	0.2199	0.2207	0.2209
1/4	0.2501	0.2503	0.2509	0.2511	0.2519	0.2521
5/16	0.3126	0.3128	0.3134	0.3136	0.3144	0.3146
3/8	0.3751	0.3753	0.3759	0.3761	0.3769	0.3771
7/16	0.4376	0.4378	0.4384	0.4386	0.4394	0.4396
1/2	0.5001	0.5003	0.5009	0.5011	0.5019	0.5021
9/16	0.5626	0.5628	0.5634	0.5636	0.5644	0.5646
5/8	0.6251	0.6253	0.6259	0.6261	0.6269	0.6271
3/4	0.7501	0.7503	0.7509	0.7511	0.7519	0.7521
7/8	0.8751	0.8753	0.8759	0.8761	0.8769	0.8771
1	1.0001	1.0003	1.0009	1.0011	1.0019	1.0021
1 1/4	1.2501	1.2503	1.2509	1.2511	1.2519	1.2521

36 - 40 Materials/Types

36 Tap-End 18-8 Stainless
Tap-End Steel
Thread Steel

41-43

41 Capabilities
Tolerance Chart

42 Sales Policies

Suburban Industries is AS9100D/ISO 9001:2015 certified!

ANAB
ANSI National Accreditation Board
ACCREDITED
ISO/IEC 17021-1
MANAGEMENT SYSTEMS CERTIFICATION BODY

CERTIFIED BY SCB
AS9100D ®
ISO 9001

Steel

+0.0002 Standard Tolerance: +0.0001” to +0.0003”

+0.001 Oversize Tolerance: +0.0009” to +0.0011”

+0.002 Oversize Tolerance: +0.0019” to +0.0021”

Unhardened Steel: 1215 Steel, one side with alternate end

Bright Finish: Dipped in rust preventative

Black Oxide Finish: Reduces friction, prevents galling, and rust-resistant

Pins smaller than 1/8” diameter have a 1,000 piece minimum order quantity

Diameter	Length	+0.0002	+0.001	+0.002	Black Oxide	Unhardened
1/64	1/4	11926	-	-	11926E	-
1/64	1/2	11933	-	-	11933E	-
1/32	3/16	09953‡	-	-	09953E	-
1/32	5/16	09957	-	-	09957E	-
1/32	3/8	09959	-	-	09959E	-
3/64	1/4	11950M	-	-	11950E	-
3/64	3/8	09976M	-	-	09976E	-
3/64	1/2	09980M	-	-	09980E	-
3/64	3/4	09984M	-	-	09984E	-
3/64	1	09988M	-	-	09988E	-
1/16	5/32	09999	-	-	09999E	-
1/16	3/16	10001	-	-	10001E‡	-
1/16	1/4	10002	14002	-	10002E	-
1/16	5/16	10003	14003	-	10003E‡	-
1/16	3/8	10004	14004	-	10004E‡	-
1/16	7/16	10005	-	-	10005E	-
1/16	1/2	10006	14006	-	10006E	-
1/16	5/8	10007	14007	-	10007E	-
1/16	3/4	10008	14008	-	10008E	-
1/16	7/8	10009	-	-	10009E	-
1/16	1	10010	-	-	10010E	-
1/16	1 1/4	10012	-	-	10012E	-

‡ ***- Made to order***

Phone: (630) 766-3773 info@sub-ind.com

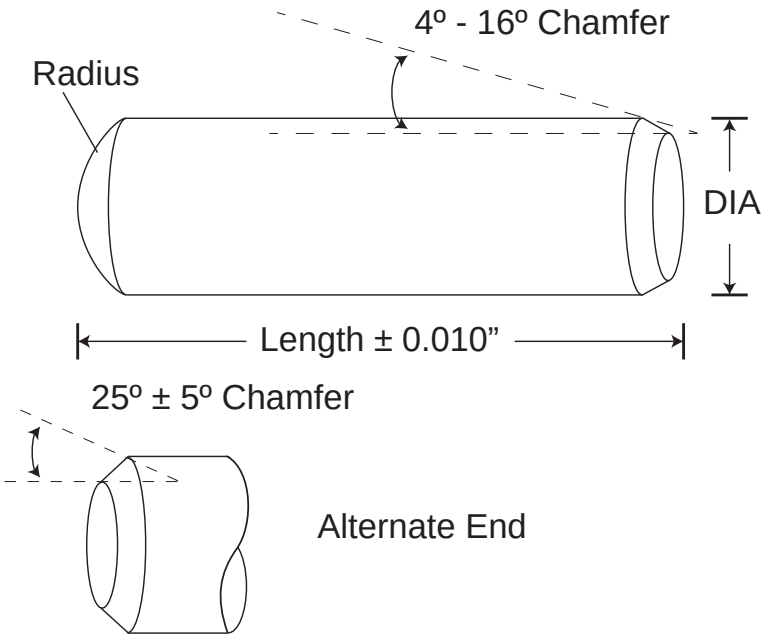

Diameter	Length	+0.0002	+0.001	+0.002	Black Oxide	Unhardened
1/16	1 1/2	10360‡	-	-	10360E	-
5/64	1/4	10013‡	-	-	10013E	-
5/64	3/4	10018‡	-	-	10018E	-
3/32	1/8	10020	-	-	10020E	-
3/32	3/16	10022	-	-	10022E	-
3/32	1/4	10023	14023	-	10023E	-
3/32	5/16	10024	14024	-	10024E	-
3/32	3/8	10025	14025	-	10025E‡	-
3/32	7/16	10026	12033	-	10026E	-
3/32	1/2	10027	14027	-	10027E	-
3/32	5/8	10030	14030	-	10030E	-
3/32	3/4	10033	14033	-	10033E	-
3/32	7/8	10037	-	-	10037E	-
3/32	1	10040	-	-	10040E	-
3/32	1 1/4	10043	-	-	10043E	-
3/32	1 1/2	10046	-	-	10046E	-
3/32	2	10053	-	-	10078E	-
7/64	3/8	10113	-	-	10113E	-
1/8	1/8	10985‡	-	-	10985E	-
1/8	5/16	10995‡	12060	13078‡	10995E	-
1/8	3/8	11001	12001	13001	13001EM	11001UM
1/8	7/16	-	-	-	-	11003U

‡ - ***Made to order***

Steel

+0.0002 Standard Tolerance: +0.0001” to +0.0003”

+0.001 Oversize Tolerance: +0.0009” to +0.0011”

+0.002 Oversize Tolerance: +0.0019” to +0.0021”

Unhardened Steel: C1215 Steel, one side with alternate end

Bright Finish: Dipped in rust preventative

Black Oxide Finish: Reduces friction, prevents galling, and rust-resistant

Pins smaller than 1/8” diameter have a 1,000 piece minimum order quantity

Diameter	Length	+0.0002	+0.001	+0.002	Black Oxide	Unhardened
1/8	1/2	11004	12004	13004	13004EM	11004UM
1/8	5/8	11007	12007	13007	13007EM	-
1/8	3/4	11010	12010	13010	13010EM	11010UM
1/8	7/8	11013	-	-	20030‡	-
1/8	15/16	11014	-	-	11014E	-
1/8	1	11016	12016	13016	13016EM	11016UM
1/8	1 1/8	11017	-	-	11017E	-
1/8	1 1/4	11019	12019	13019	11019E	-
1/8	1 3/8	-	-	13087	-	-
1/8	1 1/2	11022	12022	13022	11022E	-
1/8	1 5/8	11023	-	-	11023E	-
1/8	1 3/4	11025	-	-	11025E	-
1/8	2	11028	-	-	11028E	-
1/8	2 1/4	11024	-	-	11024E	-
1/8	3	22030	-	-	22030E	-
5/32	1 1/4	11048‡	-	-	11048E	-
5/32	1 3/4	11053	-	-	11053E	-
3/16	1/4	15612	-	-	15612E	-
3/16	1/2	11031	12031	13031	13031EM	11031U
3/16	5/8	11034	12034	13034	11034E	-
3/16	3/4	11037	12037	13037	13037EM	37211M
3/16	7/8	11040	-	-	11040E	-

‡ ***- Made to order***

Phone: (630) 766-3773 info@sub-ind.com

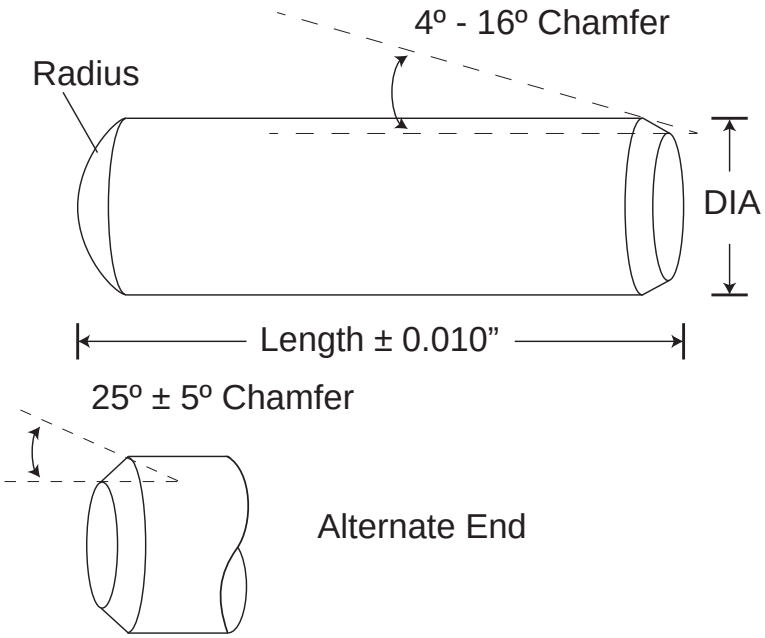

Diameter	Length	+0.0002	+0.001	+0.002	Black Oxide	Unhardened
3/16	1	11043	12043	13043	13043EM	37212M
3/16	1 1/8	11044	-	-	11044E	-
3/16	1 1/4	11046	12046	13046	13046EM	37213M
3/16	1 3/8	15083	-	-	15083E	-
3/16	1 1/2	11049	12049	13049	13049EM	37214M
3/16	1 5/8	11074	-	-	11074E	-
3/16	1 3/4	11052	-	-	11052E	-
3/16	2	11055	12055	13055	11055E	-
3/16	2 1/2	11077‡	-	-	11077E	-
3/16	3	11057	-	-	11057E	-
7/32	1/2	11086	-	-	11086E	-
7/32	3/4	-	-	-	11087E‡	-
7/32	1 1/2	-	-	-	11093E‡	-
1/4	1/2	11058	12058	13058	13058EM	-
1/4	5/8	11061	12061	13061	11061E	-
1/4	3/4	11064	12064	13064	13064EM	37221M
1/4	7/8	11067	-	-	11067E	11067U
1/4	15/16	11110‡	-	-	11110E	-
1/4	1	11070	12070	13070	13070EM	37222M
1/4	1 1/4	11073	12073	13073	13073EM	37223M
1/4	1 3/8	11113	-	-	11113E	-
1/4	1 1/2	11076	12076	13076	13076EM	37224M

‡ - ***Made to order***

Steel

+0.0002 Standard Tolerance: +0.0001” to +0.0003”

+0.001 Oversize Tolerance: +0.0009” to +0.0011”

+0.002 Oversize Tolerance: +0.0019” to +0.0021”

Unhardened Steel: 1215 Steel, one side with alternate end

Bright Finish: Dipped in rust preventative

Black Oxide Finish: Reduces friction, prevents galling, and rust-resistant

Pins smaller than 1/8” diameter have a 1,000 piece minimum order quantity

Diameter	Length	+0.0002	+0.001	+0.002	Black Oxide	Unhardened
1/4	1 3/4	11079	-	-	11079E	-
1/4	2	11082	12082	13082	13082EM	11082U
1/4	2 1/4	11085	-	-	11085E	-
1/4	2 1/2	11088	12088	-	11088E	-
1/4	2 3/4	11116	-	-	11116E	-
1/4	3 1/4	11418	-	-	11418E	-
1/4	4	11090	-	-	11090E	-
5/16	1/2	11091	12091	-	11091E	-
5/16	5/8	11094	-	-	11094E	-
5/16	3/4	11097	12097	13097	13097EM	-
5/16	7/8	11100	-	-	11100E	-
5/16	1	11103	12103	13103	13103EM	37231M
5/16	1 1/8	11104	-	-	11104E	-
5/16	1 1/4	11106	12106	13106	13106EM	37106M
5/16	1 3/8	11107	-	-	11107E	-
5/16	1 1/2	11109	12109	13109	13109EM	37232M
5/16	1 3/4	11112	-	-	11112E	-
5/16	2	11115	12115	13115	13115EM	37233M
5/16	2 1/4	11118	-	-	11118E	-
5/16	2 1/2	11121	12121	13121	11121E	-
5/16	3	11124	12124	13191	11124E	-
5/16	3 3/4	11150‡	-	-	11150E	-

‡ ***- Made to order***

Phone: (630) 766-3773 info@sub-ind.com

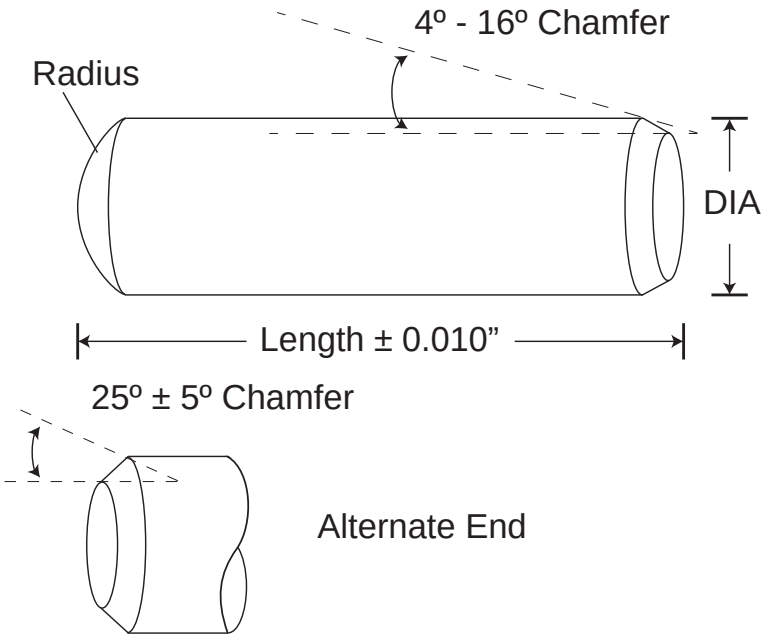

Diameter	Length	+0.0002	+0.001	+0.002	Black Oxide	Unhardened
3/8	7/16	11128‡	-	-	11128E	-
3/8	1/2	11127	-	-	11127E	-
3/8	5/8	11130	-	-	11130E	11130U
3/8	3/4	11133	12133	13133	13133EM	-
3/8	7/8	11136	-	-	11136E	-
3/8	1	11139	12139	13139	13139EM	37241M
3/8	1 1/4	11142	12142	13142	13142EM	11142UM
3/8	1 1/2	11145	12145	13145	13145EM	37242M
3/8	1 3/4	11148	-	-	11148E	11148U
3/8	2	11151	12151	13151	13151EM	37243M
3/8	2 1/4	11154	-	-	11154E	-
3/8	2 1/2	11157	12157	13157	11157E	-
3/8	2 3/4	11147	-	-	11147E	-
3/8	3	11160	12160	13160	11160E	-
3/8	3 1/4	11158	-	-	11158E	-
3/8	3 3/4	11152‡	-	-	11152E	-
3/8	5	11164‡	-	-	11164E	-
7/16	1/2	11155	-	-	11155E	-
7/16	5/8	11156	-	-	11156E	-
7/16	3/4	11159‡	-	-	11159E	-
7/16	7/8	11162	-	-	11162E	-
7/16	1	11163	12163	-	11163E	-

‡ - ***Made to order***

Steel

+0.0002 Standard Tolerance: +0.0001” to +0.0003”

+0.001 Oversize Tolerance: +0.0009” to +0.0011”

+0.002 Oversize Tolerance: +0.0019” to +0.0021”

Unhardened Steel: 1215 Steel, one side with alternate end

Bright Finish: Dipped in rust preventative

Black Oxide Finish: Reduces friction, prevents galling, and rust-resistant

Pins smaller than 1/8” diameter have a 1,000 piece minimum order quantity

Diameter	Length	+0.0002	+0.001	+0.002	Black Oxide	Unhardened
7/16	1 1/4	11166	-	-	11166E	-
7/16	1 1/2	11169	12169	-	11169E	-
7/16	1 3/4	11172	-	-	11172E	-
7/16	2	11175	12175	-	11175E	-
7/16	2 1/2	11178	12178	-	11178E	-
7/16	3	11181	12181	-	11181E	-
1/2	1/2	11171	-	-	11171E	-
1/2	3/4	11184	12231	-	11184E	-
1/2	1	11187	12187	13187	13187EM	11187UM
1/2	1 1/4	11190	12190	13190	11190E	11190UM
1/2	1 3/8	11177‡	-	-	11177E	-
1/2	1 1/2	11193	12193	13193	13193EM	11193UM
1/2	1 3/4	11196	-	-	11196E	11196UM
1/2	2	11199	12199	13199	13199EM	11199UM
1/2	2 1/4	11202	-	-	11202E	-
1/2	2 1/2	11205	12205	13205	13205EM	11205UM
1/2	3	11208	12208	13208	11208E	-
1/2	3 1/4	11183	-	-	11183E	-
1/2	3 1/2	11211	12211	-	11211E	-
1/2	3 3/4	11185	-	-	11185E	-
1/2	4	11214	12214	-	11214E	-
1/2	4 1/2	-	12243	-	-	-

‡ ***- Made to order***

Phone: (630) 766-3773 info@sub-ind.com

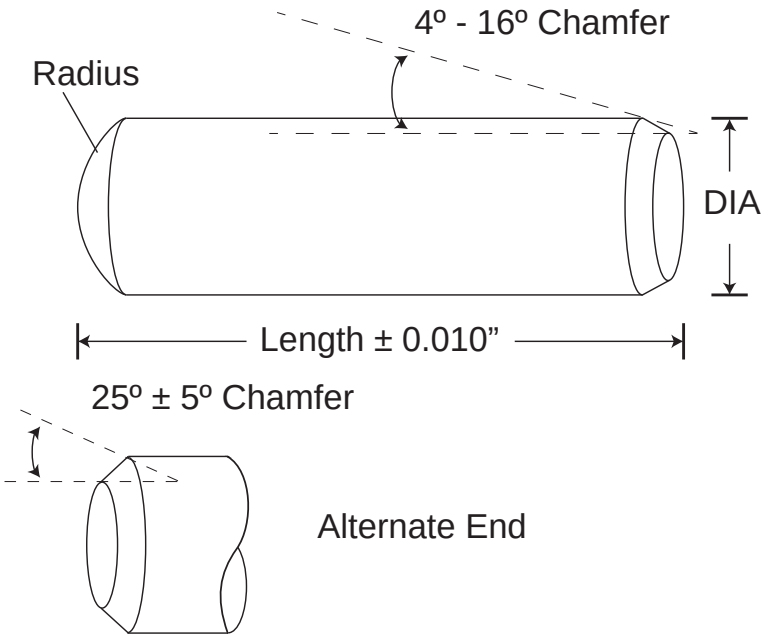

Diameter	Length	+0.0002	+0.001	+0.002	Black Oxide	Unhardened
1/2	5	-	12244	-	-	-
1/2	6	11189‡	-	-	11189E	-
5/8	1	11217	-	-	11217E	-
5/8	1 1/4	11220	12220	-	11220E	-
5/8	1 1/2	11223	12223	13268	11223E	-
5/8	1 3/4	11226	12226	13270	11226E	-
5/8	2	11229	12229	13271	13285EM	-
5/8	2 1/4	11232	-	13272	11232E	-
5/8	2 1/2	11235	12235	13273	11235E	-
5/8	3	11238	12238	13275	13295EM	-
5/8	3 1/2	11241	-	-	11241E	-
5/8	3 3/4	11212	-	-	11212E	-
5/8	4	11244	-	-	11244E	-
5/8	4 1/2	11247	-	-	11247E	-
5/8	5	11250	-	-	11250E	-
5/8	6	11740	-	-	11740E	-
3/4	1 1/4	11748	12277	-	11748E	-
3/4	1 1/2	11251	-	-	11251E	-
3/4	2	11253	12253	13288	11253E	-
3/4	2 1/2	11256	12256	13290	11256E	-
3/4	3	11259	12259	13292	11259E	-
3/4	3 1/2	11262	12262	-	11262E	-

‡ - ***Made to order***

Steel

+0.0002 Standard Tolerance: +0.0001” to +0.0003”

+0.001 Oversize Tolerance: +0.0009” to +0.0011”

+0.002 Oversize Tolerance: +0.0019” to +0.0021”

Unhardened Steel: 1215 Steel, one side with alternate end

Bright Finish: Dipped in rust preventative

Black Oxide Finish: Reduces friction, prevents galling, and rust-resistant

Pins smaller than 1/8” diameter have a 1,000 piece minimum order quantity

Diameter	Length	+0.0002	+0.001	+0.002	Black Oxide	Unhardened
3/4	4	11265	12265	-	11265E	-
3/4	4 1/2	11268	-	-	11268E	-
3/4	5	11271	-	-	11271E	-
3/4	6	11274	-	-	11274E	-
7/8	2	11277	-	-	11277E	-
7/8	2 1/2	11280	-	-	11280E	-
7/8	3	11283	-	-	11283E	-
7/8	3 1/2	11286	-	-	11286E	-
7/8	4	11289	-	-	11289E	-
7/8	5	11295	-	-	11295E	-
7/8	6	11298	-	-	11298E	-
1	1	11233	-	-	11233E	-
1	1 1/2	11236	-	-	11236E	-
1	2	11301	-	13319	11301E	-
1	2 1/2	11304	-	13321	11304E	-
1	3	11307	-	13323	11307E‡	-
1	3 1/2	11310	-	-	11310E	-
1	4	11313	-	-	11313E	-
1	4 1/2	11316	-	-	11316E	-
1	5	11319	12474	-	11319E	-
1	6	11322	12483‡	-	11322E	-
1 1/4	4	11360‡	-	-	11360E	-

‡ ***- Made to order***

Phone: (630) 766-3773 info@sub-ind.com

Stainless Steel

+0.0002 Standard Tolerance: +0.0001” to +0.0003”

+0.001 Oversize Tolerance: +0.0009” to +0.0011”

303 Stainless Steel: ASTM A582 material spec, 85 - 90 KSI tensile, one side with alternate end

316 Stainless Steel: ASTM A276 material spec, 75 - 90 KSI tensile

416 Stainless Steel: ASTM A582 material spec, 80 - 100 KSI tensile, HRC 33-42, passivated, one side with alternate end

Pins smaller than 1/8” diameter have a 1,000 piece minimum order quantity

Diameter	Length	18-8 SS +0.0002	18-8 SS +0.001	316 SS	416 SS	MS #
1/64	1/4	15009‡	-	-	-	
1/64	3/8	15010‡	-	-	-	
1/64	1/2	15011‡	-	-	-	
1/32	1/8	-	-	09950SM	-	
1/32	3/16	-	-	09953SM	11953S	
1/32	1/4	-	-	09956SM	11956S	
1/32	3/8	-	-	09959SM	11959S	
1/32	1/2	-	-	09966SM	-	
1/32	5/8	-	-	09969SM	-	
3/64	1/4	-	-	-	11967SM	
3/64	3/4	-	-	-	09984SM	
1/16	3/16	-	-	-	18000	
1/16	1/4	15002	-	-	18003	
1/16	5/16	-	-	-	18006	
1/16	3/8	15004	-	-	18009	
1/16	7/16	-	-	-	18012	
1/16	1/2	15006	-	-	18015	
1/16	5/8	15007	-	16070	18018	
1/16	3/4	15008	-	-	18021	
1/16	1 1/4	-	-	-	-	
3/32	1/4	15023	-	-	-	
3/32	5/16	-	-	-	18024	MS16555-617

‡ - Made to order

Stainless Steel

+0.0002 Standard Tolerance: +0.0001” to +0.0003”

+0.001 Oversize Tolerance: +0.0009” to +0.0011”

18-8 Stainless Steel: ASTM A582 material spec, 85 - 90 KSI tensile, one side with alternate end

316 Stainless Steel: ASTM A276 material spec, 75 - 90 KSI tensile

416 Stainless Steel: ASTM A582 material spec, 80 - 100 KSI tensile, RcH 36/40, passivated, one side with alternate end

Pins smaller than 1/8” diameter have a 1,000 piece minimum order quantity

Diameter	Length	18-8 SS +0.0002	**303** SS +0.001	316 SS	416 SS	MS #
3/32	3/8	15025	-	-	18027	
3/32	7/16	-	-	-	18030	
3/32	1/2	15027	-	-	18033	
3/32	5/8	15030	-	-	18036	
3/32	3/4	15033	-	-	18039	
3/32	7/8	15037	-	-	18042	
3/32	1	15040	-	-	18045	
7/64	1/2	15069‡	-	-	18046	
1/8	1/4	15043	-	-	-	
1/8	3/8	15046	12001SM	-	18048	MS16555-625
1/8	7/16	15077	-	-	18051	MS16555-626
1/8	1/2	15049	12004SM	-	18054	MS16555-627
1/8	9/16	15080‡	-	-	-	
1/8	5/8	15052	12007SM	-	18057	MS16555-628
1/8	3/4	15055	12010SM	-	18060	MS16555-629
1/8	7/8	15058	-	-	18063	MS16555-630
1/8	1	15061	12016SM	-	18066	MS16555-631
1/8	1 1/4	-	-	-	18069	MS16555-632
1/8	1 1/2	-	12022SM	-	18072	MS16555-633
1/8	2 1/4	15095	-	-	-	
1/8	4	15101‡	-	-	-	
5/32	1/2	-	-	-	18075	MS16555-634

‡ ***- Made to order***

Phone: (630) 766-3773 info@sub-ind.com

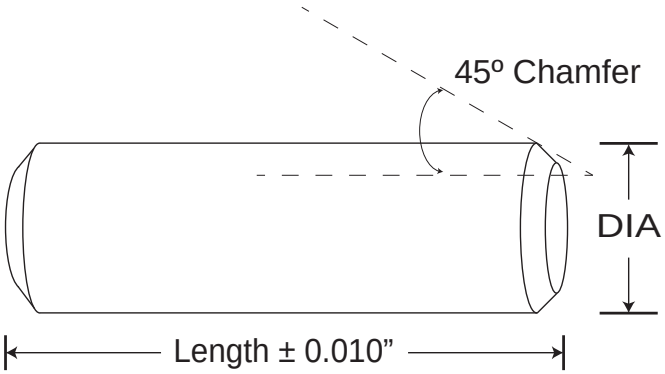

Diameter	Length	**303** SS +0.0002	**303** SS +0.001	316 SS	416 SS	MS #
5/32	5/8	-	-	-	18078	MS16555-635
5/32	3/4	-	-	-	18081	MS16555-636
5/32	7/8	-	-	-	18084	
5/32	1	-	-	-	18087	MS16555-638
5/32	1 1/4	-	-	-	18090	MS16555-639
5/32	2 1/4	15121	-	-	-	
3/16	5/16	15125	-	-	-	
3/16	3/8	15064	-	-	-	
3/16	1/2	15067	12031SM	-	-	
3/16	5/8	15070	12034SM	-	18093	MS16555-640
3/16	3/4	15073	12037SM	-	18096	MS16555-641
3/16	7/8	15076	-	-	18099	
3/16	1	15079	12043SM	-	18102	MS16555-643
3/16	1 1/4	15082	12046SM	16082	18105	MS16555-644
3/16	1 3/8	-	-	-	18097‡	
3/16	1 1/2	-	12049SM	15084	18108	MS16555-645
3/16	2	-	12055SM	-	18101	
3/16	2 1/4	-	-	-	18103	
1/4	1/4	15150	-	20044	-	
1/4	1/2	15085	12058SM	-	-	
1/4	5/8	15088	-	-	-	
1/4	3/4	15091	12064SM	-	18111	MS16555-646

‡ - ***Made to order***

Stainless Steel

+0.0002 Standard Tolerance: +0.0001” to +0.0003”

+0.001 Oversize Tolerance: +0.0009” to +0.0011”

18-8 Stainless Steel: ASTM A582 material spec, 85 - 90 KSI tensile, one side with alternate end

316 Stainless Steel: ASTM A276 material spec, 75 - 90 KSI tensile

416 Stainless Steel: ASTM A582 material spec, 80 - 100 KSI tensile, RcH 36/40, passivated, one side with alternate end

Pins smaller than 1/8” diameter have a 1,000 piece minimum order quantity

Diameter	Length	**303** SS +0.0002	**303** SS +0.001	316 SS	416 SS	MS #
1/4	7/8	15094	-	-	18114	
1/4	1	15097	12070SM	-	18117	MS16555-648
1/4	1 1/4	15100	12073SM	-	18120	MS16555-649
1/4	1 1/2	15103	12076SM	-	18123	MS16555-650
1/4	1 3/4	-	-	-	18126	MS16555-651
1/4	2	-	12082SM	-	18129	MS16555-652
1/4	3 3/4	15168	-	-	-	
5/16	1/2	15106	-	-	-	
5/16	3/4	15109	12097SM	-	-	
5/16	1	15112	12103SM	-	18147‡	MS16555-653
5/16	1 1/4	15115	12106SM	-	18148‡	MS16555-654
5/16	1 1/2	15118	12109SM	-	18149‡	MS16555-655
5/16	1 3/4	-	-	-	18150‡	MS16555-656
5/16	2	15124	12115SM	-	18151‡	MS16555-657
5/16	2 1/2	-	12121SM	-	18153‡	MS16555-659
5/16	5	20034‡	-	-	-	
3/8	5/8	-	12159S	-	-	
3/8	3/4	15130	12133SM	-	-	
3/8	1	15133	12139SM	-	-	
3/8	1 1/4	15136	12142SM	-	18166‡	MS16555-660
3/8	1 1/2	15139	12145SM	-	18168‡	MS16555-661
3/8	1 3/4	-	-	-	18169‡	MS16555-662

‡ ***- Made to order***

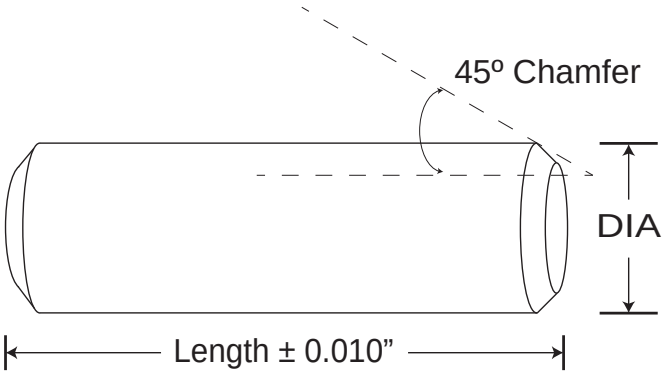

Diameter	Length	18-8 SS +0.0002	**303** SS +0.001	316 SS	416 SS	MS #
3/8	2	15145	12151SM	-	18170‡	MS16555-663
3/8	2 1/2	-	-	-	18172‡	MS16555-665
3/8	2 3/4	15192	-	-	-	
3/8	3	-	-	-	18174‡	MS16555-667
7/16	1 1/4	15202	-	-	-	
7/16	1 1/2	15203	-	-	18184‡	MS16555-668
7/16	2	15205	-	-	18186‡	MS16555-670
7/16	3	-	-	-	18189‡	MS16555-674
1/2	5/8	15214‡	-	-	-	
1/2	1	15148	12187SM	-	-	
1/2	1 1/4	15151	12190SM	-	-	
1/2	1 1/2	15154	12193SM	-	18200‡	MS16555-677
1/2	1 3/4	-	-	-	18201‡	MS16555-678
1/2	2	15160	12199SM	-	18202‡	MS16555-679
1/2	2 1/4	-	-	-	18203‡	MS16555-680
1/2	2 1/2	15166	12205SM	-	18204‡	MS16555-681
1/2	2 3/4	-	-	-	18205‡	MS16555-682
1/2	3	-	12208SM	-	18206‡	MS16555-683
1/2	3 1/4	-	-	-	18207‡	MS16555-684
1/2	3 1/2	-	-	-	18208‡	MS16555-685
1/2	3 3/4	-	-	-	18209‡	MS16555-686
1/2	4	-	12214SM	-	18210‡	MS16555-687

‡ - ***Made to order***

Stainless Steel

+0.0002 Standard Tolerance: +0.0001” to +0.0003”

+0.001 Oversize Tolerance: +0.0009” to +0.0011”

18-8 Stainless Steel: ASTM A582 material spec, 85 - 90 KSI tensile, one side with alternate end

316 Stainless Steel: ASTM A276 material spec, 75 - 90 KSI tensile

416 Stainless Steel: ASTM A582 material spec, 80 - 100 KSI tensile, RcH 36/40, passivated, one side with alternate end

Pins smaller than 1/8” diameter have a 1,000 piece minimum order quantity

Diameter	Length	18-8 SS +0.0002	**303** SS +0.001	316 SS	416 SS	MS #
5/8	1	15228	-	-	-	
5/8	1 1/2	15230‡	12223SM	-	-	
5/8	2	-	-	-	18218‡	MS16555-688
5/8	2 1/2	-	-	-	18220‡	MS16555-690
5/8	3	-	-	-	18222‡	MS16555-692
5/8	3 1/2	-	-	-	18224‡	MS16555-694
5/8	4	-	-	-	18225‡	MS16555-696
5/8	5	-	-	-	18227‡	MS16555-700
3/4	1 1/2	-	-	-	18231	
3/4	2 1/2	-	-	-	18234‡	MS16555-702
3/4	3	-	-	-	18236‡	MS16555-704
3/4	3 1/2	-	-	-	18237‡	MS16555-706
3/4	4	15251‡	-	-	18238‡	MS16555-708
3/4	4 1/2	-	-	-	18239‡	MS16555-710
3/4	5	-	-	-	18240‡	MS16555-712
3/4	6	-	-	-	18241‡	MS16555-716
7/8	1	12275S	-	-	-	
7/8	1 1/2	12276S	-	-	-	
7/8	2	12277S	-	-	-	
7/8	2 1/2	12280S	-	-	-	
7/8	3	12283S	-	-	18246‡	MS16555-718
7/8	4	-	-	-	18247‡	MS16555-722

‡ ***- Made to order***

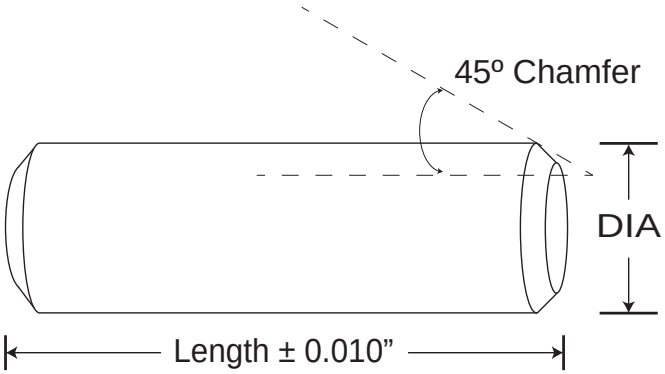

Diameter	Length	**303**SS +0.0002	**303** SS +0.001	316 SS	416 SS	MS #
7/8	5	-	-	-	18248‡	MS16555-726
1	3	-	-	-	18253‡	MS16555-732
1	4	-	-	-	18254‡	MS16555-736
1	6	-	-	-	18256‡	MS16555-744

‡ - ***Made to order***

Metric Stainless Steel & Steel

Metric Tolerance: See chart

Steel: DIN 6325-m6 tolerance, single shear breaking strength, ISO 8734

303 Stainless Steel: DIN 7-m6 tolerance, passivated, ISO 2338

316 Stainless Steel: DIN 7-m6 tolerance, passivated, ISO 2338

C: Chamfer specified per pin

Diameter	Diameter Tolerance
M0.8 - M3:	+0.002” to +0.008”
M4 - M6:	+0.004” to +0.012”
M8 - M10:	+0.006” to +0.015”
M12 - M16:	+0.007” to +0.018”
M20:	+0.008” to +0.021”

Pins smaller than 3mm diameter have a 1,000 piece minimum order quantity

Diameter	Length	**303** SS	C	316 SS	C	Steel
0.8	3	15671SM	0.12	316M0.8X3‡	0.12	ASM0.8X3‡
0.8	4	15672SM	0.12	316M0.8X4‡	0.12	ASM0.8X4‡
0.8	5	15673SM	0.12	316M0.8X5‡	0.12	ASM0.8X5‡
0.8	6	15674SM	0.12	316M0.8X6‡	0.12	ASM0.8X6‡
0.8	8	15676SM	0.12	316M0.8X8‡	0.12	ASM0.8X8‡
1	3	188M1X3‡	0.15	316M1X3‡	0.15	ASM1X3‡
1	4	188M1X4‡	0.15	15672M	0.15	ASM1X4‡
1	5	188M1X5‡	0.15	15673M	0.15	ASM1X5‡
1	6	188M1X6‡	0.15	15674M	0.15	ASM1X6‡
1	8	188M1X8‡	0.15	15676M	0.15	ASM1X8‡
1	10	188M1X10‡	0.15	15678M	0.15	ASM1X10‡
1	14	188M1X14	0.15	15680	0.15	ASM1X14‡
1.5	6	188M1.5X6‡	0.23	316M1.5X6‡	0.23	ASM1.5X6‡
1.5	8	188M1.5X8‡	0.23	316M1.5X8‡	0.23	ASM1.5X8‡
1.5	10	188M1.5X10‡	0.23	316M1.5X10‡	0.23	ASM1.5X10‡
1.5	12	188M1.5X12‡	0.23	316M1.5X12‡	0.23	ASM1.5X12‡
1.5	14	188M1.5X14‡	0.23	316M1.5X14‡	0.23	ASM1.5X14‡
1.5	16	188M1.5X16‡	0.23	316M1.5X16‡	0.23	ASM1.5X16‡
1.5	20	188M1.5X20‡	0.23	316M1.5X20‡	0.23	ASM1.5X20‡
2	5	188M2X5‡	0.3	316M2X5‡	0.3	ASM2X5‡
2	6	188M2X6‡	0.3	316M2X6‡	0.3	ASM2X6‡
2	8	188M2X8‡	0.3	316M2X8‡	0.3	ASM2X8‡

‡ ***- Made to order***

Phone: (630) 766-3773 info@sub-ind.com

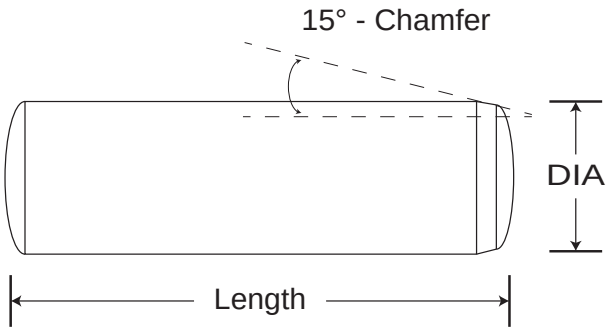

6325m6

ISO 8734

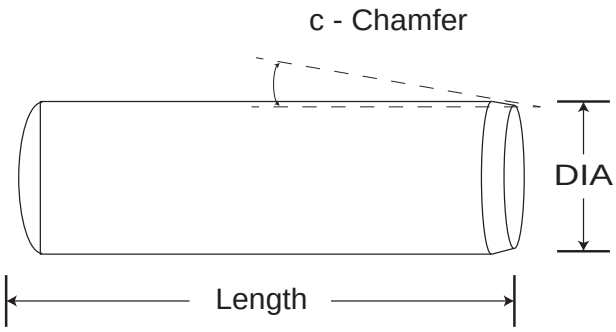

Din 7m6

ISO 2338

Diameter	Length	**303** SS	C	316 SS	C	Steel
2	10	188M2X10‡	0.3	316M2X10‡	0.3	ASM2X10‡
2	12	188M2X12‡	0.3	316M2X12‡	0.3	ASM2X12‡
2	13	ASM2X13	0.3	316M2X13‡	0.3	AM2X13‡
2	14	188M2X14‡	0.3	316M2X14‡	0.3	ASM2X14‡
2	16	188M2X16‡	0.3	316M2X16‡	0.3	ASM2X16‡
2	20	188M2X20‡	0.3	316M2X20‡	0.3	ASM2X20‡
2	24	188M2X24‡	0.3	316M2X24‡	0.3	ASM2X24‡
3	4	188M3X4‡	0.45	316M3X4‡	0.45	ASM3X4‡
3	5	188M3X5‡	0.45	316M3X5‡	0.45	ASM3X5‡
3	6	188M3X6	0.45	316M3X6‡	0.45	ASM3X6‡
3	8	188M3X8‡	0.45	316M3X8‡	0.45	ASM3X8‡
3	12	188M3X12‡	0.45	316M3X12	0.45	ASM3X12‡
3	14	188M3X14‡	0.45	316M3X14‡	0.45	ASM3X14‡
3	16	188M3X16‡	0.45	316M3X16‡	0.45	ASM3X16‡
3	18	188M3X18‡	0.45	316M3X18‡	0.45	ASM3X18‡
3	20	188M3X20‡	0.45	316M3X20‡	0.45	ASM3X20‡
3	24	188M3X24‡	0.45	316M3X24‡	0.45	ASM3X24‡
3	28	188M3X28‡	0.45	316M3X28‡	0.45	ASM3X28‡
4	5	188M4X5	0.6	316M4X5‡	0.6	ASM4X5‡
4	6	188M4X6‡	0.6	316M4X6‡	0.6	ASM4X6‡
4	8	188M4X8‡	0.6	316M4X8‡	0.6	ASM4X8‡
4	10	188M4X10‡	0.6	316M4X10‡	0.6	ASM4X10‡

‡ - ***Made to order***

Metric Stainless Steel & Steel

Metric Tolerance: See chart

Steel: DIN 6325-m6 tolerance, single shear breaking strength, ISO 8734

303 Stainless Steel: DIN 7-m6 tolerance, passivated, ISO 2338

316 Stainless Steel: DIN 7-m6 tolerance, passivated, ISO 2338

C: Chamfer specified per pin

Diameter	Diameter Tolerance
M0.8 - M3:	+0.002” to +0.008”
M4 - M6:	+0.004” to +0.012”
M8 - M10:	+0.006” to +0.015”
M12 - M16:	+0.007” to +0.018”
M20:	+0.008” to +0.021”

Pins smaller than 3mm diameter have a 1,000 piece minimum order quantity

Diameter	Length	**303** SS	C	316 SS	C	Steel
4	12	188M4X12‡	0.6	316M4X12‡	0.6	ASM4X12‡
4	14	188M4X14‡	0.6	316M4X14‡	0.6	ASM4X14‡
4	16	188M4X16‡	0.6	316M4X16‡	0.6	ASM4X16‡
4	18	188M4X18‡	0.6	316M4X18‡	0.6	ASM4X18‡
4	20	188M4X20‡	0.6	316M4X20‡	0.6	ASM4X20‡
5	6	188M5X6‡	0.75	316M5X6‡	0.75	ASM5X6‡
5	8	188M5X8‡	0.75	316M5X8‡	0.75	ASM5X8‡
5	10	188M5X10‡	0.75	316M5X10‡	0.75	ASM5X10‡
5	12	188M5X12‡	0.75	316M5X12‡	0.75	ASM5X12‡
5	14	188M5X14‡	0.75	316M5X14‡	0.75	ASM5X14‡
5	16	188M5X16‡	0.75	316M5X16‡	0.75	ASM5X16‡
5	18	188M5X18‡	0.75	316M5X18‡	0.75	ASM5X18‡
5	20	188M5X20‡	0.75	316M5X20‡	0.75	ASM5X20‡
5	22	188M5X22‡	0.75	316M5X22‡	0.75	ASM5X22‡
5	24	188M5X24‡	0.75	316M5X24‡	0.75	ASM5X24‡
5	28	188M5X28‡	0.75	316M5X28‡	0.75	ASM5X28‡
5	30	188M5X30‡	0.75	316M5X30‡	0.75	ASM5X30‡
5	32	188M5X32‡	0.75	316M5X32‡	0.75	ASM5X32‡
5	36	188M5X36‡	0.75	316M5X36‡	0.75	ASM5X36‡
5	40	188M5X40‡	0.75	316M5X40‡	0.75	ASM5X40‡
5	45	188M5X45‡	0.75	316M5X45‡	0.75	ASM5X45‡
5	50	188M5X50‡	0.75	316M5X50‡	0.75	ASM5X50‡

‡ ***- Made to order***

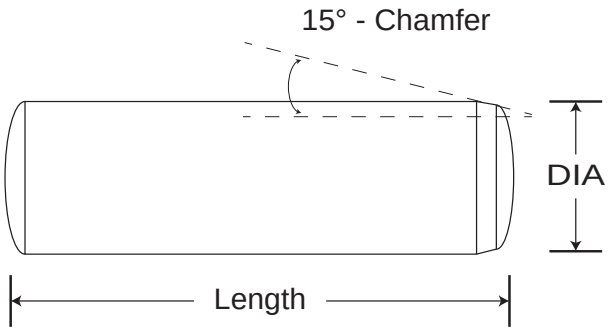

6325m6

ISO 8734

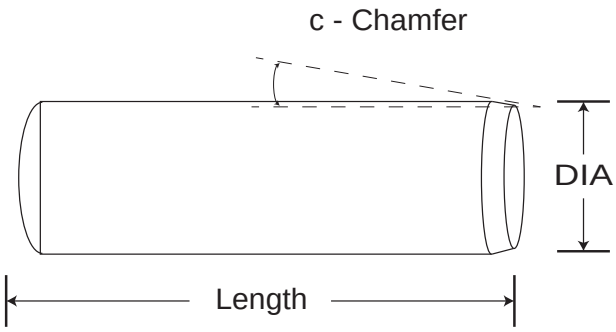

Din 7m6

ISO 2338

Diameter	Length	**303** SS	C	316 SS	C	Steel
5	60	188M5X60‡	0.75	316M5X60‡	0.75	ASM5X60‡
5	70	188M5X70‡	0.75	316M5X70‡	0.75	ASM5X70‡
6	8	188M6X8‡	0.9	316M6X8‡	0.9	ASM6X8‡
6	10	188M6X10‡	0.9	316M6X10‡	0.9	ASM6X10‡
6	12	188M6X12‡	0.9	316M6X12‡	0.9	ASM6X12‡
6	14	188M6X14‡	0.9	316M6X14‡	0.9	ASM6X14‡
6	16	188M6X16‡	0.9	316M6X16‡	0.9	ASM6X16‡
6	18	188M6X18‡	0.9	316M6X18‡	0.9	ASM6X18‡
6	20	188M6X20‡	0.9	316M6X20‡	0.9	ASM6X20‡
6	22	188M6X22‡	0.9	316M6X22‡	0.9	ASM6X22‡
6	24	188M6X24‡	0.9	316M6X24‡	0.9	ASM6X24‡
6	26	188M6X26‡	0.9	316M6X26‡	0.9	ASM6X26‡
6	28	188M6X28‡	0.9	316M6X28‡	0.9	ASM6X28‡
6	30	188M6X30‡	0.9	316M6X30‡	0.9	ASM6X30‡
6	32	188M6X32‡	0.9	316M6X32‡	0.9	ASM6X32‡
6	36	188M6X36‡	0.9	316M6X36‡	0.9	ASM6X36‡
6	40	188M6X40‡	0.9	316M6X40‡	0.9	ASM6X40‡
6	45	188M6X45‡	0.9	316M6X45‡	0.9	ASM6X45‡
6	50	188M6X50‡	0.9	316M6X50‡	0.9	ASM6X50‡
6	55	188M6X55‡	0.9	316M6X55‡	0.9	ASM6X55‡
6	60	188M6X60‡	0.9	316M6X60‡	0.9	ASM6X60‡
6	70	188M6X70‡	0.9	316M6X70‡	0.9	ASM6X70‡

‡ - ***Made to order***

Metric Stainless Steel & Steel

Metric Tolerance: See chart

Steel: DIN 6325-m6 tolerance, single shear breaking strength, ISO 8734

303 Stainless Steel: DIN 7-m6 tolerance, passivated, ISO 2338

316 Stainless Steel: DIN 7-m6 tolerance, passivated, ISO 2338

C: Chamfer specified per pin

Diameter	Diameter Tolerance
M0.8 - M3:	+0.002” to +0.008”
M4 - M6:	+0.004” to +0.012”
M8 - M10:	+0.006” to +0.015”
M12 - M16:	+0.007” to +0.018”
M20:	+0.008” to +0.021”

Pins smaller than 3mm diameter have a 1,000 piece minimum order quantity

Diameter	Length	**303** SS	C	316 SS	C	Steel
6	80	188M6X80‡	0.9	316M6X80‡	0.9	ASM6X80‡
8	10	188M8X10‡	1.2	316M8X10‡	1.2	ASM8X10‡
8	12	188M8X12‡	1.2	316M8X12‡	1.2	ASM8X12‡
8	14	188M8X14‡	1.2	316M8X14‡	1.2	ASM8X14‡
8	16	188M8X16‡	1.2	316M8X16‡	1.2	ASM8X16‡
8	18	188M8X18‡	1.2	316M8X18‡	1.2	ASM8X18‡
8	20	188M8X20‡	1.2	316M8X20‡	1.2	ASM8X20‡
8	22	188M8X22‡	1.2	316M8X22‡	1.2	ASM8X22‡
8	24	188M8X24‡	1.2	316M8X24‡	1.2	ASM8X24‡
8	26	188M8X26‡	1.2	316M8X26‡	1.2	ASM8X26‡
8	28	188M8X28‡	1.2	316M8X28‡	1.2	ASM8X28‡
8	30	188M8X30‡	1.2	316M8X30‡	1.2	ASM8X30‡
8	32	188M8X32‡	1.2	316M8X32‡	1.2	ASM8X32‡
8	36	188M8X36‡	1.2	316M8X36‡	1.2	ASM8X36‡
8	40	188M8X40‡	1.2	316M8X40‡	1.2	ASM8X40‡
8	45	188M8X45‡	1.2	316M8X45‡	1.2	ASM8X45‡
8	50	188M8X50‡	1.2	316M8X50‡	1.2	ASM8X50‡
8	55	188M8X55‡	1.2	316M8X55‡	1.2	ASM8X55‡
8	60	188M8X60‡	1.2	316M8X60‡	1.2	ASM8X60‡
8	70	188M8X70‡	1.2	316M8X70‡	1.2	ASM8X70‡
8	80	188M8X80‡	1.2	316M8X80‡	1.2	ASM8X80‡
10	14	188M10X14‡	1.5	316M10X14‡	1.5	ASM10X14‡

‡ ***- Made to order***

Phone: (630) 766-3773 info@sub-ind.com

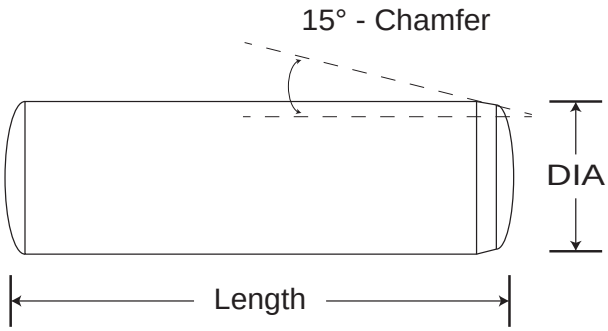

6325m6

ISO 8734

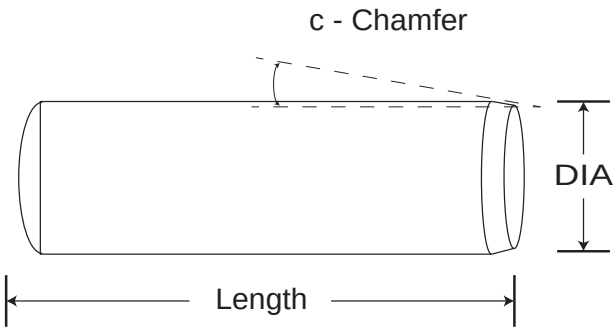

Din 7m6

ISO 2338

Diameter	Length	**303** SS	C	316 SS	C	Steel
10	16	188M10X16‡	1.5	316M10X16‡	1.5	ASM10X16‡
10	18	188M10X18‡	1.5	316M10X18‡	1.5	ASM10X18‡
10	20	188M10X20‡	1.5	316M10X20‡	1.5	ASM10X20‡
10	22	188M10X22‡	1.5	316M10X22‡	1.5	ASM10X22‡
10	24	188M10X24‡	1.5	316M10X24‡	1.5	ASM10X24‡
10	26	188M10X26‡	1.5	316M10X26‡	1.5	ASM10X26‡
10	28	188M10X28‡	1.5	316M10X28‡	1.5	ASM10X28‡
10	30	188M10X30‡	1.5	316M10X30‡	1.5	ASM10X30‡
10	32	188M10X32‡	1.5	316M10X32‡	1.5	ASM10X32‡
10	36	188M10X36‡	1.5	316M10X36‡	1.5	ASM10X36‡
10	40	188M10X40‡	1.5	316M10X40‡	1.5	ASM10X40‡
10	45	188M10X45‡	1.5	316M10X45‡	1.5	ASM10X45‡
10	50	188M10X50‡	1.5	316M10X50‡	1.5	ASM10X50‡
10	55	188M10X55‡	1.5	316M10X55‡	1.5	ASM10X55‡
10	60	188M10X60‡	1.5	316M10X60‡	1.5	ASM10X60‡
10	70	188M10X70‡	1.5	316M10X70‡	1.5	ASM10X70‡
10	80	188M10X80‡	1.5	316M10X80‡	1.5	ASM10X80‡
10	90	188M10X90‡	1.5	316M10X90‡	1.5	ASM10X90‡
12	14	188M12X14‡	1.8	316M12X14‡	1.8	ASM12X14‡
12	16	188M12X16‡	1.8	316M12X16‡	1.8	ASM12X16‡
12	18	188M12X18‡	1.8	316M12X18‡	1.8	ASM12X18‡
12	20	188M12X20‡	1.8	316M12X20‡	1.8	ASM12X20‡

‡ - ***Made to order***

Metric Stainless Steel & Steel

Metric Tolerance: See chart

Steel: DIN 6325-m6 tolerance, single shear breaking strength, ISO 8734

303 Stainless Steel: DIN 7-m6 tolerance, passivated, ISO 2338

316 Stainless Steel: DIN 7-m6 tolerance, passivated, ISO 2338

C: Chamfer specified per pin

Diameter	Diameter Tolerance
M0.8 - M3:	+0.002” to +0.008”
M4 - M6:	+0.004” to +0.012”
M8 - M10:	+0.006” to +0.015”
M12 - M16:	+0.007” to +0.018”
M20:	+0.008” to +0.021”

Pins smaller than 3mm diameter have a 1,000 piece minimum order quantity

Diameter	Length	**303** SS	C	316 SS	C	Steel
12	22	188M12X22‡	1.8	316M12X22‡	1.8	ASM12X22‡
12	24	188M12X24‡	1.8	316M12X24‡	1.8	ASM12X24‡
12	26	188M12X26‡	1.8	316M12X26‡	1.8	ASM12X26‡
12	28	188M12X28‡	1.8	316M12X28‡	1.8	ASM12X28‡
12	30	188M12X30‡	1.8	316M12X30‡	1.8	ASM12X30‡
12	32	188M12X32‡	1.8	316M12X32‡	1.8	ASM12X32‡
12	36	188M12X36‡	1.8	316M12X36‡	1.8	ASM12X36‡
12	40	188M12X40‡	1.8	316M12X40‡	1.8	ASM12X40‡
12	45	188M12X45‡	1.8	316M12X45‡	1.8	ASM12X45‡
12	50	188M12X50‡	1.8	316M12X50‡	1.8	ASM12X50‡
12	55	188M12X55‡	1.8	316M12X55‡	1.8	ASM12X55‡
12	60	188M12X60‡	1.8	316M12X60‡	1.8	ASM12X60‡
12	70	188M12X70‡	1.8	316M12X70‡	1.8	ASM12X70‡
12	80	188M12X80‡	1.8	316M12X80‡	1.8	ASM12X80‡
12	90	188M12X90‡	1.8	316M12X90‡	1.8	ASM12X90‡
12	100	188M12X100‡	1.8	316M12X100‡	1.8	ASM12X100‡
14	30	188M14X30‡	2	316M14X30‡	2	ASM14X30‡
14	40	188M14X40‡	2	316M14X40‡	2	ASM14X40‡
14	50	188M14X50‡	2	316M14X50‡	2	ASM14X50‡
14	80	188M14X80‡	2	316M14X80‡	2	ASM14X80‡
16	30	188M16X30‡	2.5	316M16X30‡	2.5	ASM16X30‡
16	36	188M16X36‡	2.5	316M16X36‡	2.5	ASM16X36‡

‡ ***- Made to order***

Phone: (630) 766-3773 info@sub-ind.com

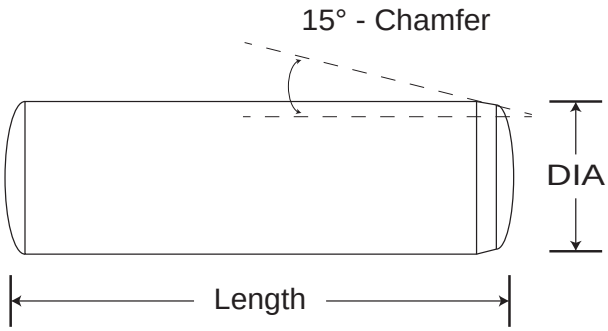

6325m6

ISO 8734

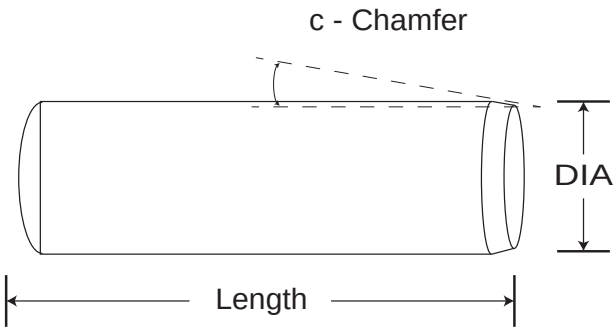

Din 7m6

ISO 2338

Diameter	Length	**303** SS	C	316 SS	C	Steel
16	40	188M16X40‡	2.5	316M16X40‡	2.5	ASM16X40‡
16	45	188M16X45‡	2.5	316M16X45‡	2.5	ASM16X45‡
16	50	188M16X50‡	2.5	316M16X50‡	2.5	ASM16X50‡
16	60	188M16X60‡	2.5	316M16X60‡	2.5	ASM16X60‡
16	70	188M16X70‡	2.5	316M16X70‡	2.5	ASM16X70‡
16	80	188M16X80‡	2.5	316M16X80‡	2.5	ASM16X80‡
16	90	188M16X90‡	2.5	316M16X90‡	2.5	ASM16X90‡
16	100	188M16X100‡	2.5	316M16X100‡	2.5	ASM16X100‡
20	50	188M20X50‡	3	316M20X50‡	3	ASM20X50‡
20	60	188M20X60‡	3	316M20X60‡	3	ASM20X60‡
20	70	188M20X70‡	3	316M20X70‡	3	ASM20X70‡
20	80	188M20X80‡	3	316M20X80‡	3	ASM20X80‡
20	90	188M20X90‡	3	316M20X90‡	3	ASM20X90‡
20	100	188M20X100‡	3	316M20X100‡	3	ASM20X100‡

‡ - ***Made to order***

Aluminum, Monel, & Titanium

+0.0002 Standard Tolerance: +0.0001” to +0.0003”

Aluminum: 6061-T6 Aluminum, corrosion resistant, thermally and electrically conductive

Monel: R400 Nickel/Copper, ASTMB164 material specification, 80 KSI tensile, corrosion resistant and heat resistant

Titanium: ASTM Grade 2, 30 KSI tensile, 60% lighter than steel

All Materials are non-magnetic

Pins smaller than 1/8” diameter have a 1,000 piece minimum order quantity

Diameter	Length	Aluminum	Monel	Titanium
1/16	1/4	10002AM		
1/16	3/8	10004AM		
1/16	1/2	10006AM		
3/32	1/4	10023AM		
3/32	3/8	10025AM		
3/32	1/2	10027AM		
1/8	1/4	10994A	10994N	10994T
1/8	5/16	10995A‡	10995N‡	10995T
1/8	3/8	11001AM	11001N	11001T
1/8	1/2	11004AM	11004N	11004T
1/8	5/8	11007AM	11007N	11007T
1/8	3/4	11010AM	11010N‡	11010T
1/8	1	11016A‡	11016N	11016T
3/16	3/8	11030A‡	11030N‡	11030T
3/16	1/2	11031AM	11031N	11031T
3/16	5/8	11034AM	11034N‡	11034T
3/16	3/4	11037AM	11037N‡	11037T‡
3/16	1	11043AM	11043N‡	11043T
1/4	1/2	11058AM	11058N‡	11058T
1/4	5/8	11061AM	11061N‡	11061T
1/4	3/4	11064AM	11064N‡	11064T
1/4	1	11070AM	11070N‡	11070T

‡ ***- Made to order***

Phone: (630) 766-3773 info@sub-ind.com

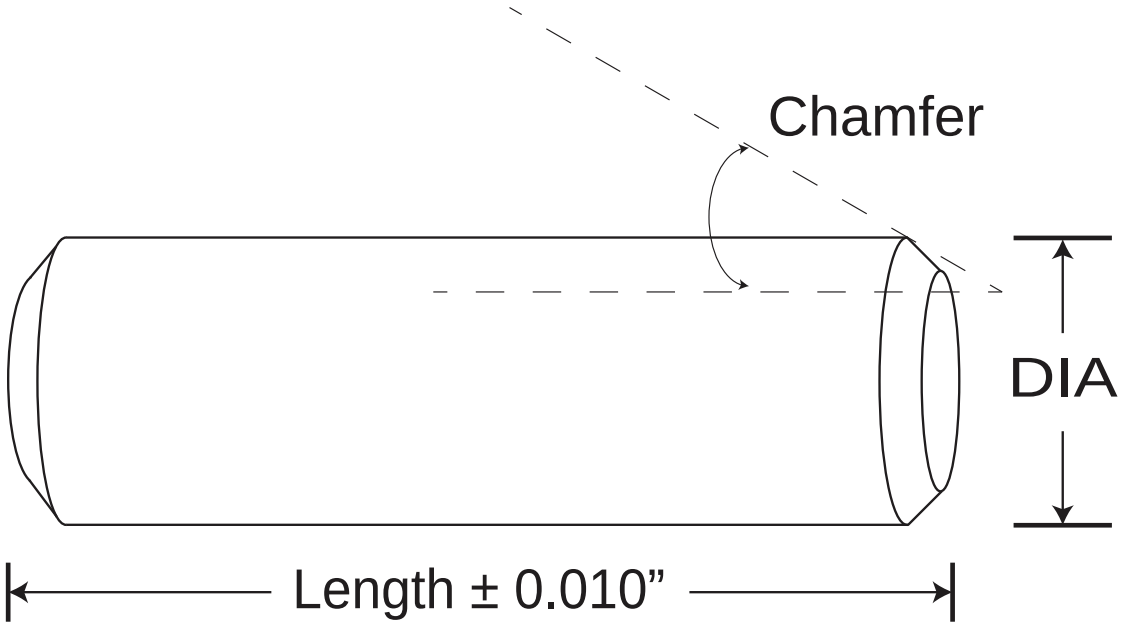

Diameter	Length	Aluminum	Monel	Titanium
1/4	1 1/2	11076A‡	11076N‡	11076T
1/4	2	11082A‡	11082N	11082T
5/16	3/4	11097AM	11097N‡	11097T‡
5/16	1	11103AM	11103N‡	11103T‡
5/16	1 1/4	11106A	11106N‡	11106T‡
5/16	1 1/2	11109A	11109N‡	11109T‡
3/8	3/4	11133A	11133N‡	11133T‡
3/8	1	11139A	11139N‡	11139T‡
3/8	1 1/4	11142A	11142N	11142T‡
3/8	1 1/2	11145A	11145N	11145T‡

‡ - ***Made to order***

Pull Dowel Pins

Stainless Steel & Steel

+0.0002 Standard Tolerance: +0.0001” to +0.0003”

Steel: ASME B18.8.2 material specification, double shear breaking strength

303 Stainless Steel: Corrosion resistant

Vented: Flat side to pin that relieves trapped air and allows for easier insertion and removal

T: Diameter of internal hole with the threads per inch listed

H: Length of internal thread

Diameter	Length	H	T	18-8 SS Non Vented	18-8 SS Vented	Steel Vented
1/4	1/2	0.41	8-32	14062NV‡	14062‡	17110‡
1/4	3/4	0.41	8-32	14064NV	14064	17111
1/4	1	0.41	8-32	14070NV	14070	17000
1/4	1 1/4	0.41	8-32	14073NV	14073	17003
1/4	1 1/2	0.41	8-32	14076NV	14076	17006
1/4	1 3/4	0.41	8-32	14079NV	14079‡	17009
1/4	2	0.41	8-32	14082NV	14082	17012
1/4	2 1/2	0.41	8-32	14088NV	14088	17013‡
5/16	3/4	0.47	10-32	14097NV	14097	17015
5/16	1	0.47	10-32	14103NV	14103	17018
5/16	1 1/4	0.47	10-32	14106NV	14106	17021
5/16	1 1/2	0.47	10-32	14109NV	14109	17024
5/16	1 3/4	0.47	10-32	14110NV‡	14110‡	17027
5/16	2	0.47	10-32	14115NV	14115‡	17030
5/16	2 1/4	0.47	10-32	14117NV‡	14117‡	17031‡
5/16	2 1/2	0.47	10-32	14121NV	14121	17032‡
3/8	3/4	0.47	10-32	14127NV‡	14127‡	17033
3/8	1	0.47	10-32	14139NV	14139	17036
3/8	1 1/4	0.47	10-32	14142NV	14142	17039
3/8	1 1/2	0.47	10-32	14145NV	14145	17042
3/8	1 3/4	0.47	10-32	14148NV‡	14148‡	17045
3/8	2	0.47	10-32	14151NV	14151	17048

‡ - ***Made to order***

Phone: (630) 766-3773 info@sub-ind.com

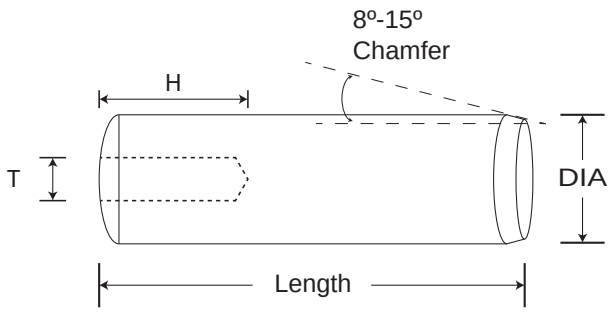

No Vent

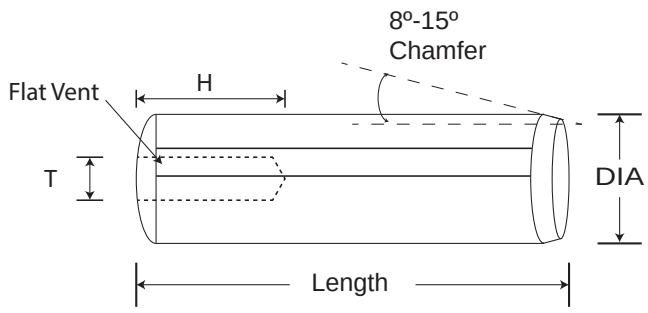

Vented

Diameter	Length	H	T	**303** SS Non Vented	**303** SS Vented	Steel Vented
3/8	2 1/4	0.47	10-32	14154NV	14154‡	17049‡
3/8	2 1/2	0.47	10-32	14157NV	14157	17051
3/8	3	0.47	10-32	14160NV	14160‡	17052
7/16	1	0.63	1/4-20	14168NV‡	14168‡	17053‡
7/16	1 1/2	0.63	1/4-20	14170NV‡	14170‡	17112‡
7/16	2	0.63	1/4-20	14173NV‡	14173‡	17113‡
1/2	3/4	0.63	1/4-20	14185NV‡	14185‡	17114‡
1/2	1	0.63	1/4-20	14187NV	14187	17115
1/2	1 1/4	0.63	1/4-20	14190NV	14190	17054
1/2	1 1/2	0.63	1/4-20	14193NV	14193	17057
1/2	1 3/4	0.63	1/4-20	14196NV	14196	17060
1/2	2	0.63	1/4-20	14199NV	14199	17063
1/2	2 1/4	0.63	1/4-20	14202NV‡	14202‡	17066
1/2	2 1/2	0.63	1/4-20	14205NV	14205	17069
1/2	3	0.63	1/4-20	14208NV	14208	17072
1/2	3 1/2	0.63	1/4-20	14210NV‡	14211	17073‡
1/2	4	0.63	1/4-20	14215NV‡	14215‡	17074‡
5/8	1 1/4	0.63	1/4-20	14220NV‡	14220‡	17116‡
5/8	1 1/2	0.63	1/4-20	14223NV	14223	17075
5/8	1 3/4	0.63	1/4-20	14227NV‡	14227‡	17078
5/8	2	0.63	1/4-20	14229NV	14229	17081
5/8	2 1/4	0.63	1/4-20	14232NV	14232‡	17084

‡ - ***Made to order***

Stainless Steel & Steel

+0.0002 Standard Tolerance: +0.0001” to +0.0003”

Steel: ASME B18.8.2 material specification, double shear breaking strength

303 Stainless Steel: Corrosion resistant

Vented: Flat side to pin that relieves trapped air and allows for easier insertion and removal

T: Diameter of internal hole with the threads per inch listed

H: Length of internal thread

Diameter	Length	H	T	**303** SS Non Vented	**303** SS Vented	Steel Vented
5/8	2 1/2	0.63	1/4-20	14235NV	14235	17087
5/8	3	0.63	1/4-20	14238NV	14238	17090
5/8	4	0.63	1/4-20	14240NV‡	14240‡	17091‡
3/4	1 1/2	0.78	5/16-18	14245NV‡	14245‡	17092‡
3/4	2	0.78	5/16-18	14253NV	14253	17093
3/4	2 1/2	0.78	5/16-18	14254NV	14254‡	17096
3/4	3	0.78	5/16-18	14259NV	14259	17099
3/4	4	0.78	5/16-18	14265NV	14265‡	17100‡
7/8	2	0.78	5/16-18	14269NV‡	14278‡	17101‡
1	2	0.78	5/16-18	14301NV‡	14301	17102
1	2 1/2	0.78	5/16-18	14303NV‡	14303‡	17105
1	3	0.78	5/16-18	14307NV	14307	17108
1	4	0.78	5/16-18	14313NV	14313‡	17109‡

‡ - ***Made to order***

Phone: (630) 766-3773 info@sub-ind.com

Metric Stainless Steel & Steel

Standard Tolerance: See chart

Steel : DIN 7979D-m6 tolerance, double shear breaking strength

Vented: Flat side to pin that relieves trapped air and allows for easier insertion and removal

Diameter	Diameter Tolerance
M6:	+0.004” to +0.012”
M8 - M10:	+0.006” to +0.015”
M12 - M16:	+0.007” to +0.018”
M20:	+0.008” to +0.021”

T: Diameter of internal hole with the threads per millimeter listed

H: Length of internal thread

Diameter	Length	H	T	Steel Non Vented	Steel Vented
6	16	M6	M4 - .7	76200NV‡	76200‡
6	18	M6	M4 - .7	76201NV‡	76201‡
6	20	M6	M4 - .7	76202NV‡	76202‡
6	24	M6	M4 - .7	76203NV‡	76203‡
6	28	M6	M4 - .7	76204NV‡	76204‡
6	30	M6	M4 - .7	76205NV‡	76205‡
6	32	M6	M4 - .7	76206NV‡	76206‡
6	36	M6	M4 - .7	76207NV‡	76207‡
6	40	M6	M4 - .7	76208NV‡	76208‡
6	50	M6	M4 - .7	76209NV‡	76209‡
6	60	M6	M4 - .7	76210NV‡	76210‡
8	20	M8	M5 - .8	76211NV‡	76211‡
8	24	M8	M5 - .8	76212NV‡	76212‡
8	28	M8	M5 - .8	76213NV‡	76213‡
8	30	M8	M5 - .8	76214NV‡	76214‡
8	32	M8	M5 - .8	76215NV‡	76215‡
8	36	M8	M5 - .8	76216NV‡	76216‡
8	40	M8	M5 - .8	76217NV‡	76217‡
8	50	M8	M5 - .8	76218NV‡	76218‡
8	60	M8	M5 - .8	76219NV‡	76219‡
8	70	M8	M5 - .8	76220NV‡	76220‡
8	80	M8	M5 - .8	76221NV‡	76221‡

‡ - ***Made to order***

Pull Dowel Pins

Metric Stainless Steel & Steel

Standard Tolerance: See chart

Steel : DIN 7979D-m6 tolerance, double shear breaking strength

Vented: Flat side to pin that relieves trapped air and allows for easier insertion and removal

Diameter	Diameter Tolerance
M6:	+0.004” to +0.012”
M8 - M10:	+0.006” to +0.015”
M12 - M16:	+0.007” to +0.018”
M20:	+0.008” to +0.021”

T: Diameter of internal hole with the threads per millimeter listed

H: Length of internal thread

Diameter	Length	H	T	Steel Non Vented	Steel Vented
10	24	M10	M6 - 1	76222NV‡	76222‡
10	28	M10	M6 - 1	76223NV‡	76223‡
10	30	M10	M6 - 1	76224NV‡	76224‡
10	32	M10	M6 - 1	76225NV‡	76225‡
10	36	M10	M6 - 1	76226NV‡	76226‡
10	40	M10	M6 - 1	76227NV‡	76227‡
10	50	M10	M6 - 1	76228NV‡	76228‡
10	60	M10	M6 - 1	76229NV‡	76229‡
10	70	M10	M6 - 1	76230NV‡	76230‡
10	80	M10	M6 - 1	76231NV‡	76231‡
12	24	M10	M6 - 1	76232NV‡	76232‡
12	30	M10	M6 - 1	76233NV‡	76233‡
12	36	M10	M6 - 1	76234NV‡	76234‡
12	40	M10	M6 - 1	76235NV‡	76235‡
12	45	M10	M6 - 1	76236NV‡	76236‡
12	50	M10	M6 - 1	76237NV‡	76237‡
12	60	M10	M6 - 1	76238NV‡	76238‡
16	32	M16	M8 - 1.25	76239NV‡	76239‡
16	36	M16	M8 - 1.25	76240NV‡	76240‡
16	40	M16	M8 - 1.25	76241NV‡	76241‡
16	50	M16	M8 - 1.25	76242NV‡	76242‡
16	60	M16	M8 - 1.25	76243NV‡	76243‡

‡ - ***Made to order***

Phone: (630) 766-3773 info@sub-ind.com

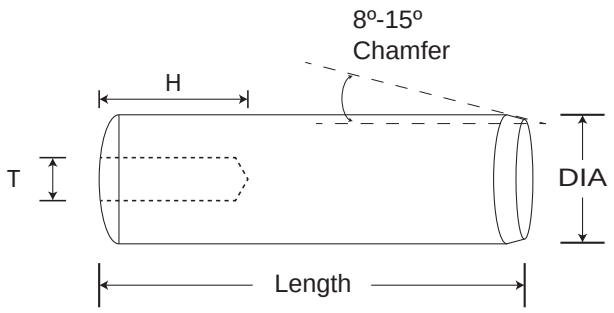

No Vent

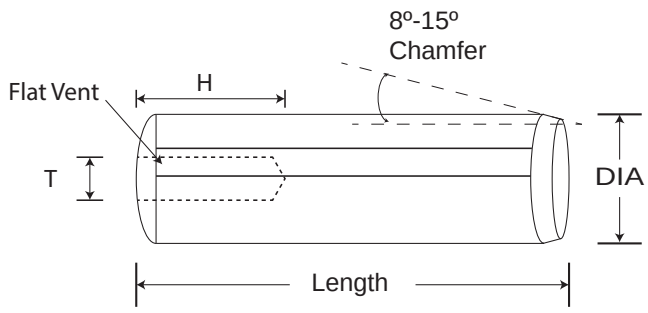

Vented

Diameter	Length	H	T	Steel Non Vented	Steel Vented
16	70	M16	M8 - 1.25	76244NV‡	76244‡
16	80	M16	M8 - 1.25	76245NV‡	76245‡
20	50	M20	M10 - 1.5	76246NV‡	76246‡
20	60	M20	M10 - 1.5	76247NV‡	76247‡
20	80	M20	M10 - 1.5	76248NV‡	76248‡

‡ - ***Made to order***

Stainless Steel & Steel

Tap-end studs have a short thread on one end called the tap end and a nut end, which is longer. Thread studs have the same thread fit the length of the stud.

303 Stainless Steel: Corrosion resistant, 85 - 95 KSI tensile

Steel: 1215 Steel, 80 - 95 KSI tensile

Tap End Thread Fit: Class 5 thread fit

Nut End Thread Fit: Class 2A thread fit

Thread Stud: UNC coarse pitch thread fit

Diameter	Length	Tap End	Nut End	18-8 SS Tap-End Stud	Steel Tap-End Stud	Steel Thread Stud
3/8 - 16	1 1/4	1/2	5/8	61500	51500	55208
3/8 - 16	1 1/2	1/2	5/8	61503	51503	55211
3/8 - 16	1 3/4	1/2	5/8	61506	51506	55214
3/8 - 16	2	1/2	3/4	61509	51509	55217
3/8 - 16	2 1/4	1/2	3/4	61511	51511	55220
3/8 - 16	2 1/2	1/2	3/4	61514	51514	55223
3/8 - 16	2 3/4	1/2	3/4	61517	51517	55224‡
3/8 - 16	3	1/2	3/4	61520	51520	55229
7/16 - 14	1 1/4	1/2	5/8	61523‡	51523	55315‡
7/16 - 14	1 1/2	9/16	5/8	61526	51526	55316‡
7/16 - 14	1 3/4	9/16	3/4	61529‡	51529	55317‡
7/16 - 14	2	9/16	3/4	61532	51532	55318‡
7/16 - 14	2 1/4	9/16	3/4	61535	51535	55319‡
7/16 - 14	2 1/2	9/16	3/4	61538	51538	55320‡
7/16 - 14	2 3/4	9/16	3/4	61541	51541	55321‡
7/16 - 14	3	9/16	7/8	61544	51544	55322‡
7/16 - 14	3 1/4	9/16	7/8	61547	51547	55323‡
7/16 - 14	3 1/2	9/16	7/8	61550	51550	55324‡
7/16 - 14	3 3/4	11/16	7/8	61553	51553	55325‡
7/16 - 14	4	11/16	1	61556	51556	55326‡
1/2 - 13	1 1/4	1/2	5/8	61559	51559	55262
1/2 - 13	1 1/2	1/2	3/4	61562	51562	55265

‡ - ***Made to order***

Phone: (630) 766-3773 info@sub-ind.com

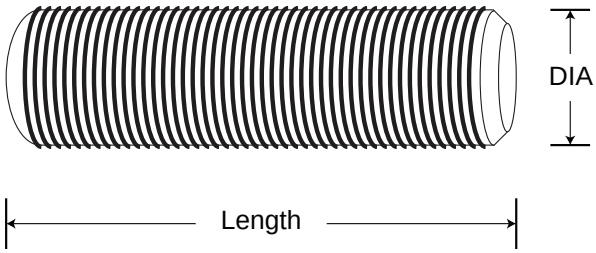

Thread Stud

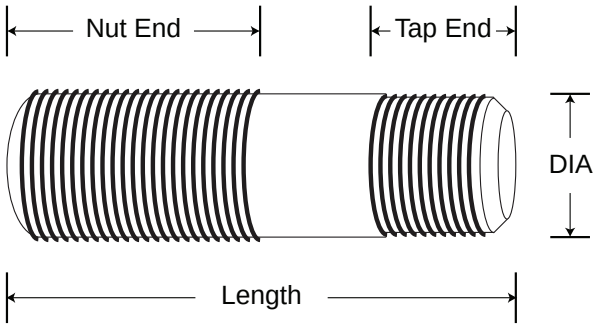

Tap-End Stud

Diameter	Length	Tap End	Nut End	**303** SS Tap-End Stud	Steel Tap-End Stud	Steel Thread Stud
1/2 - 13	1 3/4	5/8	3/4	61565	51565	55268‡
1/2 - 13	2	5/8	3/4	61568	51568	55271
1/2 - 13	2 1/4	5/8	3/4	61571	51571	55274
1/2 - 13	2 1/2	5/8	3/4	61574	51574	55277‡
1/2 - 13	2 3/4	3/4	7/8	61577	51577	55278‡
1/2 - 13	3	3/4	7/8	61580	51580	55283
1/2 - 13	3 1/4	3/4	1	61583‡	51583	55284‡
1/2 - 13	3 1/2	3/4	1	61586	51586	55289‡
1/2 - 13	3 3/4	3/4	1	61589	51589	55290‡
1/2 - 13	4	3/4	1 1/4	61592	51592	55295‡
1/2 - 13	4 1/4	3/4	1 1/4	61595‡	51595	55297‡
1/2 - 13	4 1/2	7/8	1 1/4	61598	51598	55301‡
1/2 - 13	4 3/4	7/8	1 1/4	61501‡	51601	55303‡
1/2 - 13	5	7/8	1 1/4	61604	51604	55307‡
1/2 - 13	5 1/2	7/8	1 1/4	61605‡	51603‡	55310‡
5/8 - 11	1 1/2	5/8	3/4	61607	51607	55337‡
5/8 - 11	1 3/4	3/4	7/8	61610	51610	55338‡
5/8 - 11	2	3/4	7/8	61613	51613	55339‡
5/8 - 11	2 1/4	3/4	7/8	61616	51616	55340‡
5/8 - 11	2 1/2	3/4	7/8	61619	51619	55341‡
5/8 - 11	2 3/4	3/4	1	61622	51622	55342‡
5/8 - 11	3	7/8	1	61625	51625	55343‡

‡ - ***Made to order***

Stainless Steel & Steel

Tap-end studs have a short thread on one end called the tap end and a nut end, which is longer. Thread studs have the same thread fit the length of the stud.

303 Stainless Steel: Corrosion resistant, 85 - 95 KSI tensile

Steel: 1215 Steel, 80 - 95 KSI tensile

Tap End Thread Fit: Class 5 thread fit

Nut End Thread Fit: Class 2A thread fit

Thread Stud: UNC coarse pitch thread fit

Diameter	Length	Tap End	Nut End	**303** SS Tap-End Stud	Steel Tap-End Stud	Steel Thread Stud
5/8 - 11	3 1/4	7/8	1	61628	51628	55344‡
5/8 - 11	3 1/2	7/8	1	61631	51631	55345‡
5/8 - 11	3 3/4	7/8	1 1/4	61633‡	51634	55346‡
5/8 - 11	4	7/8	1 1/4	61637	51637	55347‡
5/8 - 11	4 1/4	7/8	1 1/4	61640	51640	55348‡
5/8 - 11	4 1/2	7/8	1 1/4	61643	51643	55349‡
5/8 - 11	4 3/4	7/8	1 1/4	61646‡	51646	55350‡
5/8 - 11	5	7/8	1 1/2	61649	51649	55351‡
5/8 - 11	5 1/2	7/8	1 1/2	61652	51652	55352‡
5/8 - 11	6	7/8	1 1/2	61655	51655	55353‡
3/4 - 10	2	7/8	7/8	61658	51658	55363‡
3/4 - 10	2 1/4	7/8	7/8	61661	51661	55364‡
3/4 - 10	2 1/2	7/8	7/8	61664	51664	55365‡
3/4 - 10	2 3/4	7/8	1	61667	51667	55366‡
3/4 - 10	3	7/8	1	61670	51670	55367‡
3/4 - 10	3 1/4	7/8	1	61673	51673	55368‡
3/4 - 10	3 1/2	7/8	1 1/4	61676	51676	55369‡
3/4 - 10	3 3/4	7/8	1 1/4	61679‡	51679	55370‡
3/4 - 10	4	1	1 1/4	61682	51682	55371‡
3/4 - 10	4 1/4	1	1 1/4	61685‡	51685	55372‡
3/4 - 10	4 1/2	1	1 1/2	61688	51688	55373‡
3/4 - 10	4 3/4	1	1 1/2	61691	51691	55374‡

‡ - ***Made to order***

Phone: (630) 766-3773 info@sub-ind.com

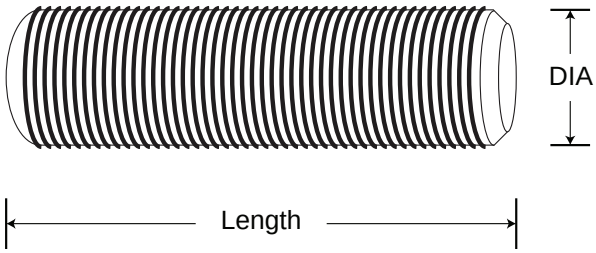

Thread Stud

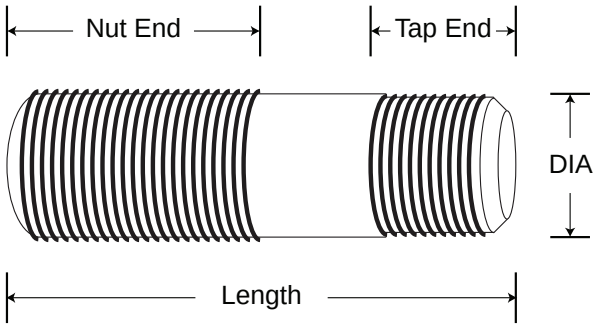

Tap-End Stud

Diameter	Length	Tap End	Nut End	**303** SS Tap-End Stud	Steel Tap-End Stud	Steel Thread Stud
3/4 - 10	5	1	1 1/2	61694	51694	55375‡
3/4 - 10	5 1/2	1	1 1/2	61697	51697	55376‡
3/4 - 10	6	1	1 3/4	61700	51700	55377‡
3/4 - 10	6 1/2	1	1 3/4	61701‡	51701	55378‡
7/8 - 9	2 1/2	1	1 1/8	61713‡	51703	55390‡
7/8 - 9	2 3/4	1	1 1/8	61714‡	51706	55391‡
7/8 - 9	3	1	1 1/8	61715‡	51709	55392‡
7/8 - 9	3 1/4	1	1 1/8	61716‡	51712	55393‡
7/8 - 9	3 1/2	1	1 1/4	61717‡	51715	55394‡
7/8 - 9	3 3/4	1	1 1/4	61718‡	51718	55395‡
7/8 - 9	4	1	1 1/4	61719‡	51721	55396‡
7/8 - 9	4 1/4	1	1 1/2	61720‡	51724	55397‡
7/8 - 9	4 1/2	1 1/8	1 1/2	61721‡	51727	55398‡
7/8 - 9	4 3/4	1 1/8	1 1/2	61722‡	51730	55399‡
7/8 - 9	5	1 1/8	1 3/4	61723‡	51733	55400‡
7/8 - 9	5 1/2	1 1/8	1 3/4	61724‡	51736	55401‡
7/8 - 9	6	1 1/8	1 3/4	61725‡	51739	55402‡
1 - 8	3	1 1/8	1 1/4	61731‡	51742	55408‡
1 - 8	3 1/4	1 1/8	1 1/4	61732‡	51745	55409‡
1 - 8	3 1/2	1 1/8	1 1/4	61733‡	51748	55410‡
1 - 8	3 3/4	1 1/8	1 1/4	61734‡	51751	55411‡
1 - 8	4	1 1/4	1 1/2	61735‡	51754	55412‡

‡ - ***Made to order***

Stainless Steel & Steel

Tap-end studs have a short thread on one end called the tap end and a nut end, which is longer. Thread studs have the same thread fit the length of the stud.

303 Stainless Steel: Corrosion resistant, 85 - 95 KSI tensile

Steel: 1215 Steel, 80 - 95 KSI tensile

Tap End Thread Fit: Class 5 thread fit

Nut End Thread Fit: Class 2A thread fit

Thread Stud: UNC coarse pitch thread fit

Diameter	Length	Tap End	Nut End	**303** SS Tap-End Stud	Steel Tap-End Stud	Steel Thread Stud
1 - 8	4 1/4	1 1/4	1 1/2	61736‡	51757	55413‡
1 - 8	4 1/2	1 1/4	1 3/4	61737‡	51760	55414‡
1 - 8	4 3/4	1 1/4	1 3/4	61738‡	51763	55415‡
1 - 8	5	1 1/4	2	61739‡	51766	55416‡
1 - 8	5 1/2	1 1/2	2	61740‡	51769	55417‡
1 - 8	6	1 1/2	2	61741‡	51772	55418‡

‡ - ***Made to order***

Phone: (630) 766-3773 info@sub-ind.com

Tolerance Chart

Nominal Size	STD +0.0002		+0.001 Oversize		+0.002 Oversize	
	Min	Max	Min	Max	Min	Max
1/64	0.0157	0.0159	-	-	-	-
1/32	0.0314	0.0316	-	-	-	-
3/64	0.0470	0.0472	-	-	-	-
1/16	0.0626	0.0628	0.0634	0.0636	0.0644	0.0646
5/64	0.0782	0.0784	0.0790	0.0792	0.0800	0.0802
3/32	0.0939	0.0941	0.0947	0.0949	0.0957	0.0959
7/64	0.1095	0.1097	0.1103	0.1105	0.1113	0.1115
1/8	0.1251	0.1253	0.1259	0.1261	0.1269	0.1271
5/32	0.1564	0.1566	0.1572	0.1574	0.1582	0.1584
3/16	0.1876	0.1878	0.1884	0.1886	0.1894	0.1896
7/32	0.2189	0.2191	0.2197	0.2199	0.2207	0.2209
1/4	0.2501	0.2503	0.2509	0.2511	0.2519	0.2521
5/16	0.3126	0.3128	0.3134	0.3136	0.3144	0.3146
3/8	0.3751	0.3753	0.3759	0.3761	0.3769	0.3771
7/16	0.4376	0.4378	0.4384	0.4386	0.4394	0.4396
1/2	0.5001	0.5003	0.5009	0.5011	0.5019	0.5021
9/16	0.5626	0.5628	0.5634	0.5636	0.5644	0.5646
5/8	0.6251	0.6253	0.6259	0.6261	0.6269	0.6271
3/4	0.7501	0.7503	0.7509	0.7511	0.7519	0.7521
7/8	0.8751	0.8753	0.8759	0.8761	0.8769	0.8771
1	1.0001	1.0003	1.0009	1.0011	1.0019	1.0021
1 1/4	1.2501	1.2503	1.2509	1.2511	1.2519	1.2521

Cutting ranges are from 1/64” - 2” with diameters and 1/8” to entire bar with lengths.

Drilling or tapping diameters can be as small as 1/4” in standard or 6.35 mm in metric threads.

Grinders can finish a product with +0.0002” tolerance and are capable of grinding from 1/16” - 4” diameters.

Are fully capable of manufacturing from prints.

Standard threading is grade 2A, yet can thread any specification upon approval. Threads can reach along the entire bar, usually 12 feet, in most threading grades.

Acme threading from 1/2” - 2” diameters.

Cancellation Policy:

If canceling a custom or altered item, the customer will pay a fee proportionate to the cost incurred at the time of cancellation. A customer has 30 days to cancel a standard part and must have approval from Suburban Industries.

Certificates:

Certificate requests are only allowed at the time of quotes.

Credit Card Policy:

Customers placing orders with a credit card will be charged 50% of the invoice the day the purchase order is received, and the balance will get charged the day the order ships complete.

Disclaimer and Warranty:

Since the seller, Suburban Industries, does not control the use of its products, there are no express warranties which extend beyond the description contained herein. Seller disclaims any implied warranties of merchantability or fitness for any particular purpose. Since the seller cannot control the manner of use of its products after their sale, the seller will not be responsible for any consequential or indirect damages. Seller will not warranty or be accountable for misapplication or for products plated or modified in any manner that is not under Suburban Industries' control.

Large Quantity Bids:

Suburban Industries can quote most quantities. Contact Suburban Industries by email at sales@sub-ind.com or by fax at (630) 766-1364.

Return Policy:

Submit all return requests in writing to Suburban Industries with an explanation for the return and original purchase order number referenced. Once the request for return

Return Policy Continued:

is approved, the customer will receive returned goods authorization paperwork which must be attached to the shipment. Returned goods authorizations are good for 30 days and then must be reissued by Suburban Industries after that. After the items have been received and approved by an inspector, the credit will be issued.

Shipments:

All charges paid by Suburban Industries for shipping purposes will be added to the invoice the day after items have shipped. Suburban Industries sends all shipments through UPS. If a customer requires another carrier, the customer will be expected to make arrangements for the time of pickup within Suburban Industries' operating/ seasonal hours.

Special/Customized Parts:

If unable to find a pin or stud in our catalog because of special requirements, at the time of order, our customer service team will request a print from the customer or submit specifications in writing to be approved by the purchaser. Suburban Industries requires that requests for certificates for all items are due at the time of quote. Quoting specials can take up to 1 week depending on the complexity of the tooling needed and the materials used. While Suburban Industries items are indded manufactured in the USA, we are also able to supply some imported products. Suburban Industries appreciates the chance to quote new items and is always willing to answer any questions regarding specials.

Terms of Order:

$ 250 minimum order required for items in stock. $350 + minimum order required for custom orders. Orders will be accepted by fax and email only. Customer orders are allowed, per the industry standard, +/- 10% of the initial purchase quantity to be considered complete. All orders are shipped with net 30-day terms unless specified otherwise. Made-to-order items have a typical lead time of 4 to 6 weeks. Shipments to delinquent accounts are prohibited. Any account paid after 30 days may become credit card only on future orders. All orders are subject to credit approval.

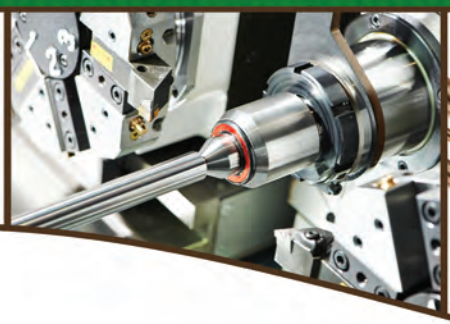
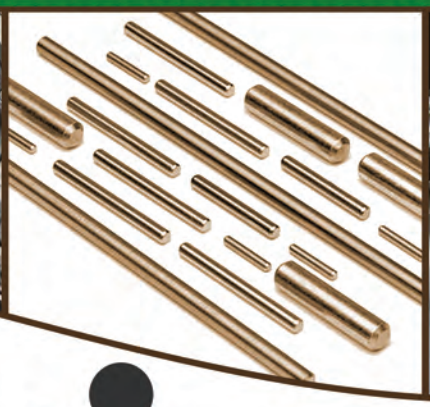
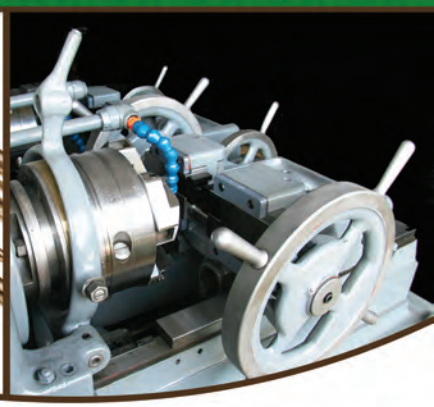

Suburban Industries
740 N Church Rd
Elmhurst, IL 60126
630.766.3773 (main)
630.766.1364 (fax)
www.sub-ind.com
sales@sub-ind.com